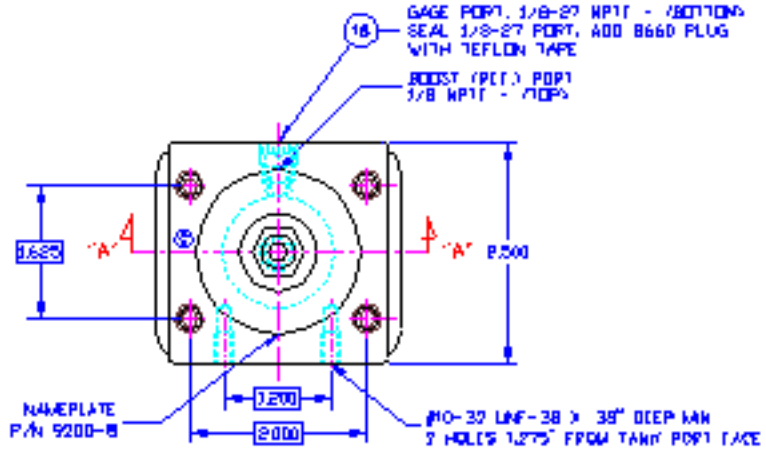

DET.	PART NO.	REQ'D.	DESCRIPTION
1	2040-1	1	BODY, VALVE
2	2040-2	1	COVER, VALVE
3	2040-3	1	POPPET, ASSEMBLY
4	SEE CHART	1	SEAT
5	2040-5	1	PLATE, SPRING
6	SEE CHART	1	SPRING
7	2040-7	1	SCREW, ADJUSTING
8	2040-8	1	NUT
9	SEE CHART	1	DIAPHRAGM
10	2040-10	1	WASHER, DIAPHRAGM
11	2040-11	1	NUT, ALUMINUM
12	2040-12	4	SOCKET HEAD CAP SCREW
13	2040-13	1	BALL
14	2040-14	1	3/8 FLAT WASHER
15	2041-16	1	"O" RING
16	8660	1	PLUG
▼17	SEE CHART	1	DIAPHRAGM ASSEMBLY

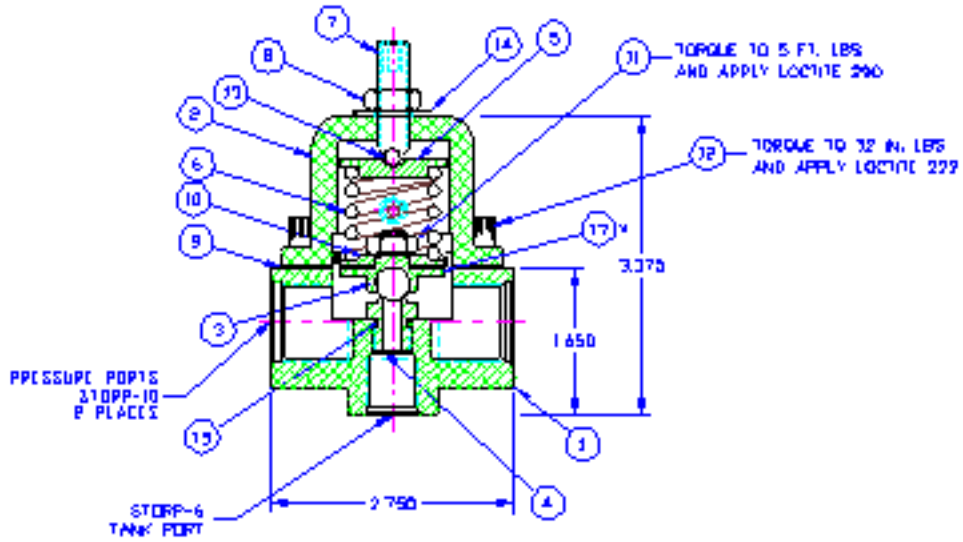

SECTION "A-A"

PART # EXAMPLE

2040 - 281 - N - 15

BASE MODEL

ITEM 4
ORIFICE SIZE
(HUNDREDTH OF INCH)

ITEM 9
FLUID SERVICE

ITEM 6
MAX. PRESSURE
PSI

2040 CHART

ITEM 4		ITEM 6		ITEM 9			ITEM 17	
DASH	PART #	DASH	PART #	DASH	PART #		DASH	PART #
200	2040-4	75	2042-8	N	NITROMETHANE	2040-91	N	2042-15
281	2041-4	30	2041-6	A	ALCOHOL & GAS	2044-9	A	2044-15
		181	2040-6					
		800	2043-8					

DRAWN	PW	5-23-97	
CHECKED			
APPROVED	PADAPEV	5-23-97	

VELDON PUMP

SIZE C — TITLE: VALVE, REGULATING

CODE IDENT. NO. 64560 — PART NO. 2040 CHART

LTR.	I.E.A.	DESCRIPTION	DATE	BY	CALCULATED
		REVISIONS			